(No Model.)

G. WYATT.

CENTERING TOOL.

No. 464,619. Patented Dec. 8, 1891.

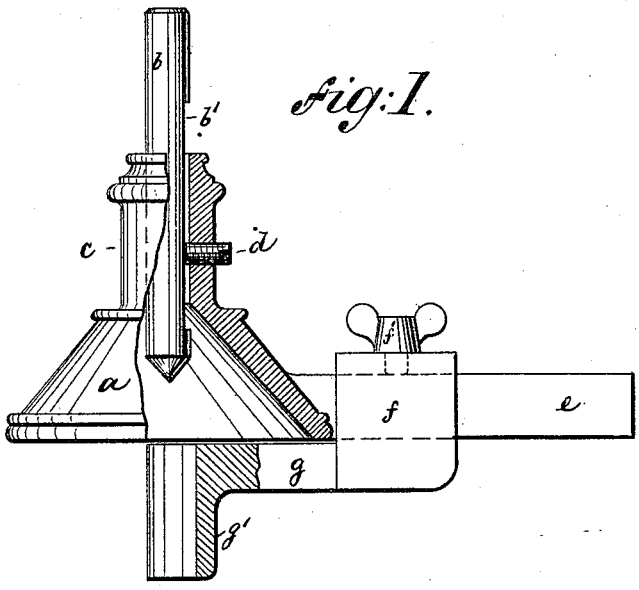

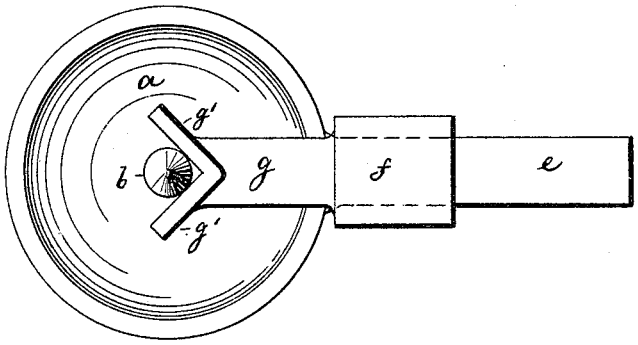

WITNESSES:
A. Schehl.
Wm. Schulz.

INVENTOR
G. Wyatt
BY Roeder & Briesen
ATTORNEYS.

THE NORRIS PETERS CO., PHOTO-LITHO., WASHINGTON, D. C.

UNITED STATES PATENT OFFICE.

GEORGE WYATT, OF BROOKLYN, NEW YORK.

CENTERING-TOOL.

SPECIFICATION forming part of Letters Patent No. 464,619, dated December 8, 1891.

Application filed August 4, 1891. Serial No. 401,685. (No model.)

To all whom it may concern:

Be it known that I, GEORGE WYATT, of Brooklyn, Kings county, New York, have invented an Improved Centering-Tool, of which the following is a specification.

This invention relates to a tool for rapidly and accurately marking the center upon work to be turned in a lathe and upon symmetrical work generally.

The invention consists in the various features of improvement more fully pointed out in the claim.

In the accompanying drawings, Figure 1 is an elevation, partly in section, of my improved centering-tool. Fig. 2 is a bottom view of the same.

The letter *a* represents a conical shell open on top and bottom and terminating at its contracted end in an open tube *c*. Within this tube there is free to move vertically a punch *b*, the pointed end of which enters the contracted end of the cone. A screw *d*, engaging a groove *b'*, of punch *b* limits its up-and-down motion.

To the cone *a* there is secured a laterally-projecting arm *e*, embraced by a slide *f*, which may be locked at any desired point by clamp *f'*. The slide *f* carries a bracket *g*, that terminates in a yoke *g'*. By moving the slide farther in or out, the yoke may be set at any desired point beneath the flaring end of the cone.

In use the cone is projected over the upper end of the work held in a vise. The work may be a bar of metal, or any object of cylindrical, square, or other symmetrical shape. As the cone is brought to bear upon the upper edge of the work it will become automatically centered. The slide *f* is now moved inward until the yoke *g'* comes to rest against the work and holds it in a true position. Next the punch *b* is brought down to indicate the center by an indentation, when the operation is completed.

What I claim is—

The combination of cone *a* and tube *c* with punch *b* within the tube, an arm *e*, projecting laterally from the cone, a slide *f*, embracing the arm, a yoke secured to the slide, and a clamp *f'* for locking the slide, substantially as specified.

GEORGE WYATT.

Witnesses:

WM. SCHULZ,

F. V. BRIESEN.